D-3525

DO NOT SCALE DRAWING REPORT ALL ERRORS TO ENG DEPT
TOLERANCES TWO DECIMALS ± .030
THREE DECIMALS ± .010

REVISIONS				
ZONE	No.	DESCRIPTION	DATE	BY
	1			

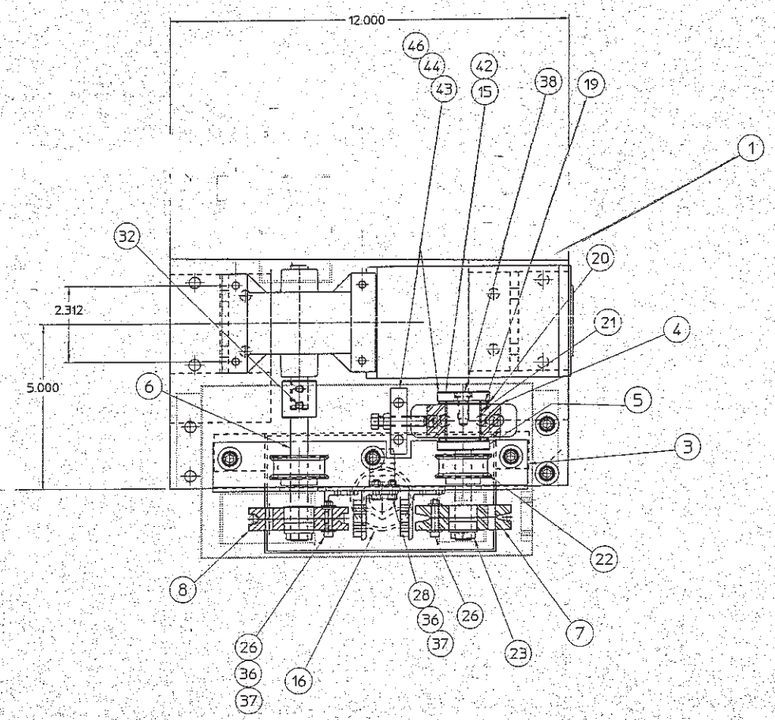

MODEL AG25 "MINI DAVID" SKIMALL™
OIL SKIMMER

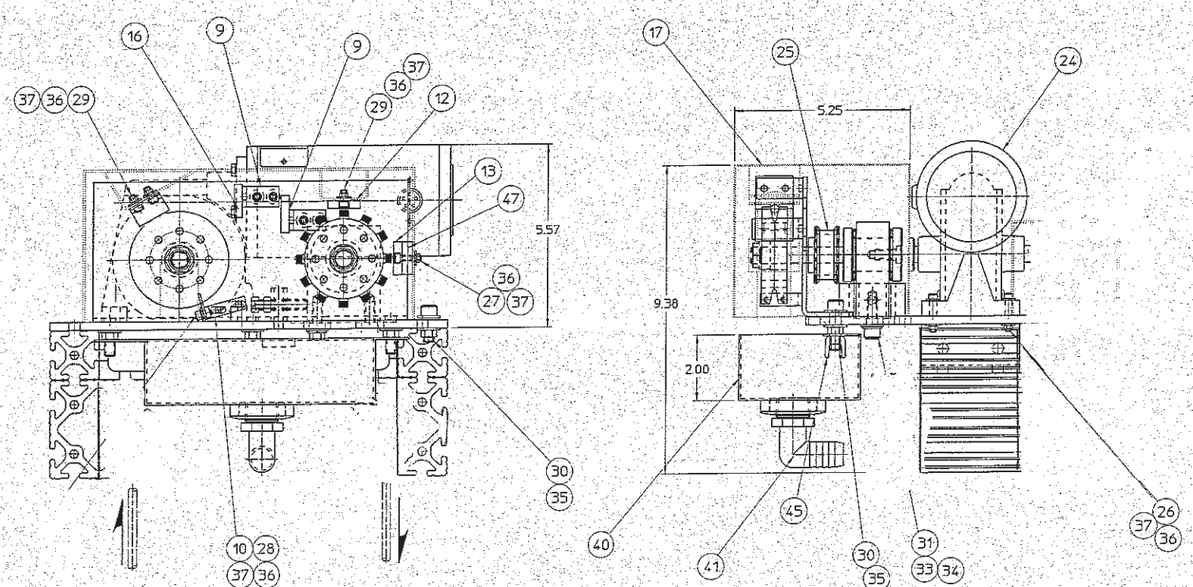

DRAWING No.	ITEM	AMT	STOCK SIZE OR DESCRIPTION	MATERIAL
A2529	47	1	SPACER BLOCK	CFS 1018
	46	1	5/16-18 JAM NUT	STL
90866A030	45	2	5/16-18 WING NUT	STL
	44	1	5/16-18 X 1.50 LG HEX HEAD BOLT	STL
A2530	43	1	ADJUSTING BLOCK	CFS 1018
A2527	42	1	SHIM SHIM STOCK	
	41	1	90 DEG. ELBOW PIPE	NYLON
C2528	40	1	SLUG PAN	STL
C2526	39	1	IDLE SHAF GUARD	
	38	1	5/16-18 X .75 LG. BUTTON HSCS	STL
	37	16	#10-24 ELASTEC LOCK NUT	STL
	36	16	#10 SAE FLAT WASHER	STL
	35	7	5/16-18 ELASTIC LOCK NUT	STL
	34	3	5/16 SAE LOCK WASHER	STL
	33	16	5/16 SAE FLAT WASHER	STL
	32	2	1/4-20 X .38LG SHSS	STL
	31	9	5/16-18 X .75LG SHCS	STL
	30	7	5/16-18 X 1.00LG SHCS	STL
	29	8	#10-24 X .38LG SHCS	STL
	28	6	#10-24 X .50LG SHCS	STL
	27	2	#10-24 X .75LG SHCS	STL
	26	20	#10-24 X 1.00LG SHCS	STL
	25	1	TIMMING BELT	PURCH
	24	1	REDUCER/MOTOR	PURCH
6202112	23	2	LOCK BUSHING	MAT'L
TP20ABW6-24	22	2	TIMMING PULLY	PURCH
EP161816	21	1	BUNTING BEARING	PURCH
INA-585	20	4	THRUST WASHER .032 THICK	PURCH
INA-525 (TC1625)	19	2	CYLINDRICAL ROLLER THRUST BEARING	PURCH
	0	0		
C2514	17	1	GUARD	STEEL
A2517	16	1	TUBE SCRAPPER	DUREON
A2510	15	1	SHAFT CAP	HRS M1020
A2516	14	1	1/4 PRESSURE BLOCK	DUREON
A2511	13	1	1/4 PRESSURE BLOCK	DUREON
A2511	12	1	1/4 PRESSURE BLOCK	DUREON
A2513	11	1	PULLY WHEEL SCRAPPER	URETHANE
A2507	10	1	SCRAPPER MOUNTING ANGLE	ALUM ANGLE
A2515	9	2	SCRAPPER MOUNTING ANGLE	ALUM ANGLE
B2501	8	2	1/4 PULLY	DUREON
B2502	7	2	1/4 GUIDE	DUREON
B2503	6	1	DRIVE SHAFT	TG & P
B2504	5	1	IDLE SHAFT	TG & P
B2505	4	1	IDLE SHAFT SUPPORT	CFS1018
C2506/AB	3	1	MOUNTING ANGLE	CFS1018
	0	0		
D2509	1	1	MOUNTING PLATE	CFS1018

SIGNATURES	MO	DAY	YR
DRAWN KGK	06	05	03
CHECKED NC	06	05	03

TYPE OF FINISH
A.S.A.
1000 ROUGH BURR
500 ROUGH RAW
250 ROUGH MACHINE
125 NON-SMOOTH FINISH
63 SMOOTH FINISH
32 FINE FINISH
16 GRIND
8 POLISH 1ST HONE
4 SUPER FINISH OR LAP

SKIMTECH

THE SKIMTECH CORPORATION BOARDMAN, OHIO U.S.A.

AG25 OIL SKIMMER ASS'Y SPARE PARTS

MATERIAL FAB STEEL

SIZE D 3525

SCALE ~ HALF SHEET OF